REV	REVISION RECORD	ECN	BY	APVD	DATE
A	INITIAL RELEASE	14183	MAC	JB	6-05-96
B	PER ECN 14471	14471	MAC	JB	10-9-96

NOTE: UNLESS OTHERWISE SPECIFIED

1. INTERPRET DRAWING IN ACCORDANCE WITH ANSI Y14.5–1982.
2. REMOVED
3. PITCH CONSISTENCY TO BE WITHIN ±.005 OVER 3.000 INCHES.
4. PART TO BE SUPPLIED ON A CONTINUOUS REEL.
5. ALL DIMENSIONS APPLY AFTER PLATING.

PART NUMBER BREAKDOWN

8–20□□□□□□□□□□□□

- PIN SIZE: 8–20
- □ = UNDER 1 INCH OAL.
- 1 = OVER 1 INCH OAL.
- OVERALL LENGTH "L"
- PIN LENGTH "P" ABOVE STAR
- PIN TYPE (SEE STAR DETAIL)
  - 4 = ROUND PIN
  - 5 = ROUND PIN WITH STANDARD STAR
- FINISH VARIATIONS
  - AA = TIN/LEAD .000120 MIN OVER NICKEL
  - BB = GOLD PLATE .000005 OVER NICKEL
  - CC = GOLD PLATE .000010 OVER NICKEL
  - WW = GOLD PLATE .000015 OVER NICKEL
  - DD = GOLD PLATE .000020 OVER NICKEL
  - EE = GOLD PLATE .000030 OVER NICKEL
- MATERIAL
  - 2 = BRASS ALLOY
  - 5 = PHOSPHOR BRONZE ALLOY
  - 7 = COPPER/NICKEL/TIN ALLOY

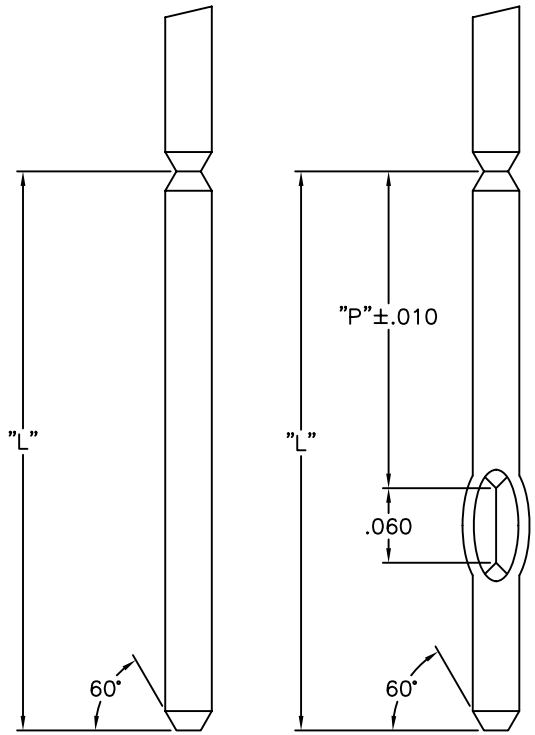

PIN WITH NO STAR

PIN WITH STAR

4 REELING ORIENTATION
AP/2 REEL
(24" O.D. x 20" I.D.)

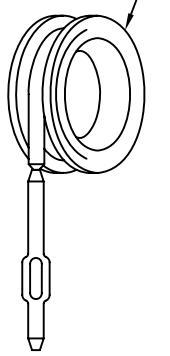

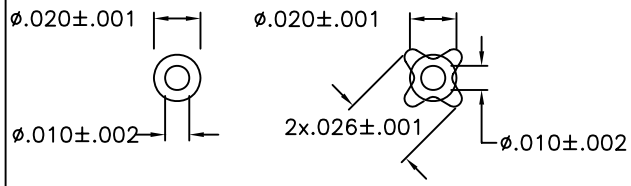

4 ROUND NO STAR 5 ROUND STD. STAR

STAR DETAIL

CUSTOMER DRAWING

This drawing and the information set forth hereon are the property of Autosplice, Inc. and are to be held in trust and confidence. Publication, duplication, disclosure, or use for any purpose not expressly authorized in writing by Autosplice, Inc. is prohibited.

ALL DIMENSIONS ARE IN INCHES

DECIMAL:
XX =±.01
XXX =±.005

ANGULAR: ±5°

autosplice ©
AUTOSPLICE INC.
AUTOSPLICE INC.
10121 Barnes Canyon Road
San Diego, California 92121
(619) 535–0077

THIRD ANGLE PROJECTION

DRAWN BY MAC M DATE 6–05–96
APPROVED BY J BIANCA DATE 6–05–96

TITLE: AUTOPIN/2 DETAIL PART DRAWING

SIZE	FSCM NO.	DRAWING NUMBER	REV.
C	0AE89	C8–20[4thru5]□□□□	B

SCALE: NONE CAD FILE NO. C08–204–5XX AND REV. SHEET 1 OF 1